Trials@uspto.gov
571-272-7822

Paper 9
Entered: March 24, 2021

UNITED STATES PATENT AND TRADEMARK OFFICE

BEFORE THE PATENT TRIAL AND APPEAL BOARD

E. & J. GALLO WINERY,
Petitioner,

v.

VINEYARD INVESTIGATIONS,
Patent Owner.

IPR2021-00077
Patent 6,947,810 B2

Before TERRENCE W. McMILLIN, JON M. JURGOVAN, and JASON W. MELVIN, *Administrative Patent Judges.*

McMILLIN, *Administrative Patent Judge*.

DECISION
Denying Institution of *Inter Partes* Review
35 U.S.C. § 314

I. INTRODUCTION

E. & J. Gallo Winery ("Petitioner") filed a Petition to institute an *inter partes* review of claims 1–14, 17–32, 35, and 36 of U.S. Patent No. 6,947,810 B2 (Ex. 1001, the "'810 patent") pursuant to 35 U.S.C. § 311 *et seq*. Paper 1 ("Petition" or "Pet."). Vineyard Investigations ("Patent Owner") filed a Preliminary Response. Paper 8 ("Preliminary Response" or "Prelim. Resp.").

We have authority under 35 U.S.C. § 314, which provides that an *inter partes* review may not be instituted unless the information presented in the Petition and the Preliminary Response shows that "there is a reasonable likelihood that the petitioner would prevail with respect to at least 1 of the claims challenged in the petition." 35 U.S.C. § 314(a) (2018). After considering the Petition, the Preliminary Response, the Reply, the Sur-reply, and the evidence of record, we do not institute an *inter partes* review as to any of the challenged claims of the '810 patent on the grounds of unpatentability presented.

A. Related Proceedings

The parties identify the following related proceeding: *Vineyard Investigations v. E.& J. Gallo Winery*, Case No. 19-cv-01482 (E.D.Ca.). Pet. 1; Paper 3, 2.

In IPR2021-00076, claims of a related patent, US 8,528,834 B2, are challenged.

B. Real Parties in Interest

Petitioner identifies E. & J. Gallo Winery as the real party-in-interest. Pet. 1. Patent Owner identifies Vineyard Investigations as the real party-in-interest. Paper 3, 2.

C. The '810 Patent

The '810 patent is titled "System for Automated Monitoring and Maintenance of Crops Including Sensors and Emitters Associated with Plants." Ex. 1001, code (54). The system is "for monitoring and managing crop growth." *Id.* at 1:19–21.

The '810 patent describes that while irrigation systems, such as for the growing of grapes, "have proven effective . . . care must be taken to provide the proper amount of water over time to the crops." *Id.* at 1:34–48. The patent also describes that the application of fertilizer and insecticides, applied with machine spraying, "requires human action and judgment," and is "labor-intensive and expensive." *Id.* at 1:67–2:12.

Figure 1, reproduced below, shows the system of the '810 patent.

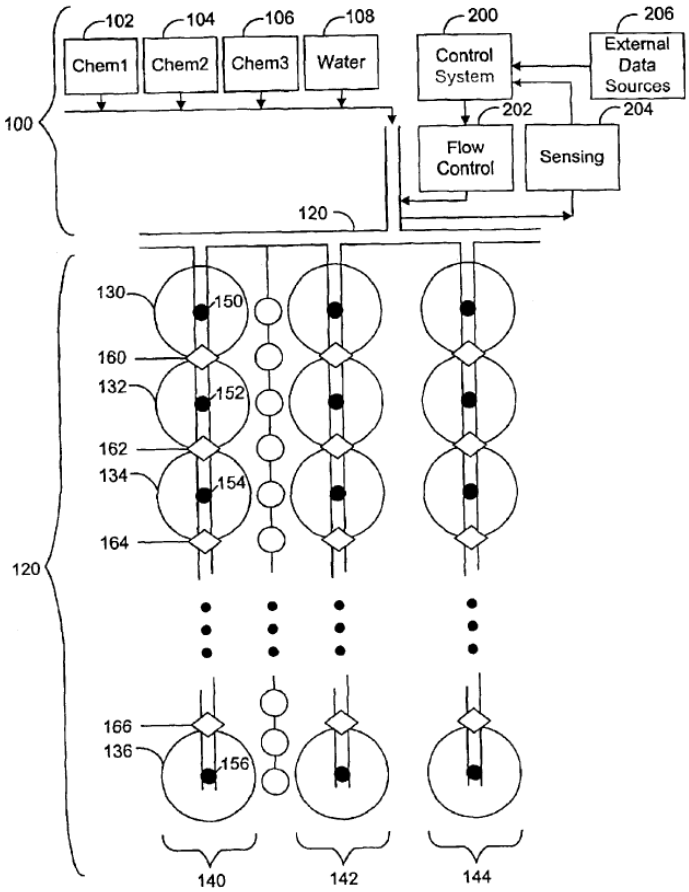

Figure 1 shows "system 100 is used to deliver materials such as chemicals 102, 104 and 106; and water 108 to crops 110 via conduit 120." *Id.* at 3:57–59. In Figure 1, "[e]ach grapevine plant is illustrated as a circle such as vines 130, 132, 134 and 136. Vines are organized into rows such as row 140,142 and 144." *Id.* at 3:65–67. The system uses multiple inner channels to keep incompatible materials separate from each other. *Id.* at 4:10–21. Figure 1 shows outlets from conduit 120 "as black dots such as emitters 150, 152, 154 and 156." *Id.* at 4:25–27.

The '810 patent system utilizes sensors, such as photodetectors and DNA sensors, "attached to the conduit at regular intervals in accordance with the spacing of the vines." *Id.* at 4:43–45.

D. Challenged Claims

Petitioner challenges claims 1–14, 17–32, 35, and 36 of the '810 patent. Pet. 1. Of the challenged claims, claims 1, 2, 6, 8, 10, and 36 are independent system claims, claims 20, 24, 26, and 28 are independent method claims. Ex. 1001, 9:12–12:63. Illustrative claims 1 and 2 recite:

> 1. A system for automated application of insecticide to a plant, the system comprising:
>
> an insect sensor positioned adjacent to the plant, wherein the insect sensor includes a DNA sensor;
>
> a control system coupled to the insect sensor for receiving a signal from the insect sensor;
>
> a conduit for conveying an insecticide to the plant;
>
> a flow control system coupled between the control system and the conduit for allowing the control system to control the flow of insecticide to the plant in response to the insect sensor;
>
> a DNA sensor;
>
> a process for determining the type of insect detected by the insect sensor based on a signal from the DNA sensor.

> 2. A system for application of a material to a plurality of plants, the system comprising:
>
> a plurality of sensors, wherein each sensor is associated with, and in fixed proximity to, one of the plants;
>
> a control system coupled to one or more of the sensors for receiving a signal from the sensors,
>
> emitters for emitting the material to a plant, wherein each emitter is associated with, and in fixed proximity to, one of the plants, and
>
> a control system for controlling emission of the material to a particular plant via the particular plants associated emitter in response to a signal from the particular plant's associated sensor.

E. The Asserted Grounds

Petitioner challenges claims 1–14, 17–32, 35, and 36 of the ’810 patent based on the grounds set forth in the table below.

Claims Challenged	35 U.S.C. §[1]	Reference(s)/Basis
2–4, 9, 11, 17–22, 27, 29, 35, 36	102(b)	Miller[2]
10, 28	103(a)	Miller, Miranda[3]
12, 13, 30, 31	103(a)	Miller, Beck[4]
1, 8	103(a)	Miller, Cass[5]
5, 23	103(a)	Miller, McCracken[6]

[1] Because the application leading to the ’810 patent was filed before March 16, 2013, patentability is governed by the versions of 35 U.S.C. §§ 102 and 103 preceding the Leahy-Smith America Invents Act (“AIA”), Pub. L. No. 112–29, 125 Stat. 284 (2011).

[2] US 4,545,396, issued Oct. 8, 1985 (Ex. 1004).

[3] Miranda, et al., *A laboratory assessment of wetness sensors for leaf, fruit and trunk surfaces*, Agricultural and Forest Meteorology 102, 2000, pp. 263–274 (Ex. 1005).

[4] US 5,585,626, issued Dec. 17, 1996 (Ex. 1006).

[5] WO 01/23890 Al, published Apr. 5, 2001 (Ex. 1007).

[6] US 4,697,739, issued Oct. 6, 1987 (Ex. 1008).

Claims Challenged	35 U.S.C. §[1]	Reference(s)/Basis
6, 7, 24–26	103(a)	Miller, Cass, McCracken
14, 32	103(a)	Miller, Heiniger[7]

II. ANALYSIS

A. Claim Construction

For an *inter partes* review petition filed after November 13, 2018, we construe claim terms "using the same claim construction standard that would be used to construe the claim in a civil action under 35 U.S.C. 282(b)." 37 C.F.R. § 42.100(b) (2019). In applying a district court-type claim construction, we are guided by the principle that the words of a claim "are generally given their ordinary and customary meaning," as would have been understood by a person of ordinary skill in the art at the time of the invention. *Phillips v. AWH Corp.*, 415 F.3d 1303, 1312–13 (Fed. Cir. 2005) (en banc) (citation omitted). "In determining the meaning of the disputed claim limitation, we look principally to the intrinsic evidence of record, examining the claim language itself, the written description, and the prosecution history, if in evidence." *DePuy Spine, Inc. v. Medtronic Sofamor Danek, Inc.*, 469 F.3d 1005, 1014 (Fed. Cir. 2006) (citing *Phillips*, 415 F.3d at 1312–17). There is a "heavy presumption," however, that a claim term carries its ordinary and customary meaning. *CCS Fitness, Inc. v. Brunswick Corp.*, 288 F.3d 1359, 1366 (Fed. Cir. 2002) (citation omitted).

Petitioner indicates the claims should be given their "plain and ordinary meaning," and notes that some claims that recite "means plus function" limitations must be construed under § 112, sixth paragraph, but

[7] *Understanding Geographic Information Systems and Global Positioning Systems in Horticultural Applications*, HortTechnology, Vol. 9 No. 4, Oct–Dec 1999 (Ex. 1009).

otherwise does not propose any specific claim construction. Pet. 10. Patent Owner agrees. Prelim. Resp. 37–38.

Accordingly, at this stage, there is no material dispute between the parties relating to claim construction and we determine that no terms require express construction for purposes of this Decision. *See Nidec Motor Corp. v. Zhongshan Broad Ocean Motor Co. Ltd.*, 868 F.3d 1013, 1017 (Fed. Cir. 2017) ("[W]e need only construe terms 'that are in controversy, and only to the extent necessary to resolve the controversy.'") (quoting *Vivid Techs., Inc. v. Am. Sci. & Eng'g, Inc*., 200 F.3d 795, 803 (Fed. Cir. 1999)). In this Decision, we give the claim terms their ordinary and customary meanings.

B. Legal Standards

In order for a prior art reference to anticipate an invention, it must disclose every limitation of the claimed invention, either explicitly or inherently. *In re Schreiber*, 128 F.3d 1473, 1477 (Fed. Cir. 1997). Anticipation "requires that every element and limitation of the claim was previously described in a single prior art reference, either expressly or inherently, so as to place a person of ordinary skill in possession of the invention." *Sanofi-Synthelabo v. Apotex, Inc.*, 550 F.3d 1075, 1082 (Fed. Cir. 2008) (*citing Schering Corp. v. Geneva Pharms., Inc*., 339 F.3d 1373, 1379 (Fed. Cir. 2003); *Cont'l Can Co. USA v. Monsanto Co.*, 948 F.2d 1264, 1267–69 (Fed. Cir. 1991)). "[U]nless a reference discloses within the four corners of the document not only all of the limitations claimed but also all of the limitations arranged or combined in the same way as recited in the claim, it cannot be said to prove prior invention of the thing claimed and, thus, cannot anticipate under 35 U.S.C. § 102." *Net MoneyIN, Inc. v. VeriSign, Inc.*, 545 F.3d 1359, 1371 (Fed. Cir. 2008).

A patent claim is unpatentable as obvious if the differences between the claimed subject matter and the prior art are such that the subject matter, as a whole, would have been obvious at the time the invention was made to a person having ordinary skill in the art to which said subject matter pertains. *KSR Int'l Co. v. Teleflex Inc.*, 550 U.S. 398, 406 (2007). The question of obviousness is resolved on the basis of underlying factual determinations including: (1) the scope and content of the prior art; (2) any differences between the claimed subject matter and the prior art; (3) the level of ordinary skill in the art; and (4) objective evidence of non-obviousness.[8] *Graham v. John Deere Co.*, 383 U.S. 1, 17–18 (1966).

"In an [*inter partes* review], the petitioner has the burden from the onset to show with particularity why the patent it challenges is unpatentable." *Harmonic Inc. v. Avid Tech., Inc.*, 815 F.3d 1356, 1363 (Fed. Cir. 2016) (citing 35 U.S.C. § 312(a)(3) (requiring *inter partes* review petitions to identify "with particularity . . . the evidence that supports the grounds for the challenge to each claim")). Petitioners cannot satisfy their burden of proving obviousness by employing "mere conclusory statements." *In re Magnum Oil Tools Int'l, Ltd.*, 829 F.3d 1364, 1380 (Fed. Cir. 2016).

C. Level of Ordinary Skill in the Art

With regard to the level of ordinary skill in the art, Petitioner contends it would include "a person possessing at least a bachelor's degree in electrical engineering, mechanical engineering, computer engineering, water engineering management or agronomy," but that a person could also qualify "with some combination of (1) more formal education (such as a master's of

[8] In its Preliminary Response, Patent Owner does not present any objective evidence of non-obviousness. *See generally* Prelim. Resp.

science degree) and less technical experience or (2) less formal education and more technical or professional experience in the aforementioned fields." Pet. 9–10 (citing Ex. 1003 ¶¶ 29–31). Patent Owner does not address the level of ordinary skill in the art. *See generally* Prelim. Resp. In order to determine whether Petitioner has demonstrated a reasonable likelihood of showing the unpatentability of at least one of the challenged claims, we adopt Petitioner's proposed level of skill in the art.

D. Cited References[9]

1. Miller (Ex. 1004)

Miller issued on October 8, 1985, from an application filed on February 25, 1985. Ex. 1004, codes (22), (45). The earliest priority date claimed for the '810 patent is May 31, 2001. Ex. 1001, code (62), 1:6–15. Petitioner contends Miller qualifies as prior art under, at least, pre-AIA 35 U.S.C. §102(b). Pet. 11. Patent Owner does not challenge the prior art status of Miller. *See generally* Prelim. Resp. Miller is prior art under, at least, pre-AIA 35 U.S.C. §102(b), (e).

Miller is titled "System for Optimum Irrigating and Fertilizing." Ex. 1004, code (54). Miller "relates to a system for automatically irrigating and fertilizing of agricultural operations such as groves, truck farms, and the like and more particularly to a computer control system in which feedback from moisture and salinity sensors is provided." *Id.* at 1:7–11. Miller

> utilizes a multiplicity of moisture and salinity sensors buried within the root zone of the crops and including means for

[9] Our detailed analysis of the obviousness challenges in the Petition is limited to the independent claims. *See infra* II.E. Therefore, this summary of the cited references is limited to the references cited against the challenged, independent claims. Accordingly, Beck and Heiniger are not summarized and no further mention is made of these references.

> measuring the complex impedance of the sensor in which the reactive part is a measure of the moisture content of the soil, and the resistive part is a measure of the salinity of the soil.

Id. at 1:46–52. "In a large operation, the area would be divided into regions with sensors buried in each region so that the requirements can be determined individually for each region. When irrigation is needed by any region, the main pump is energized by means of control circuits operating from the computer." *Id.* at 1:60–65. For moisture sensors, "it is preferred that at least two sensors be buried at different depths to be able to differentiate a high moisture level from surface water from the overall soil moisture." *Id.* at 3:31–34.

Figure 2, reproduced below, is a block diagram of a typical installation used in conjunction with orange groves. *Id.* at 3:66–68.

FIG. 2

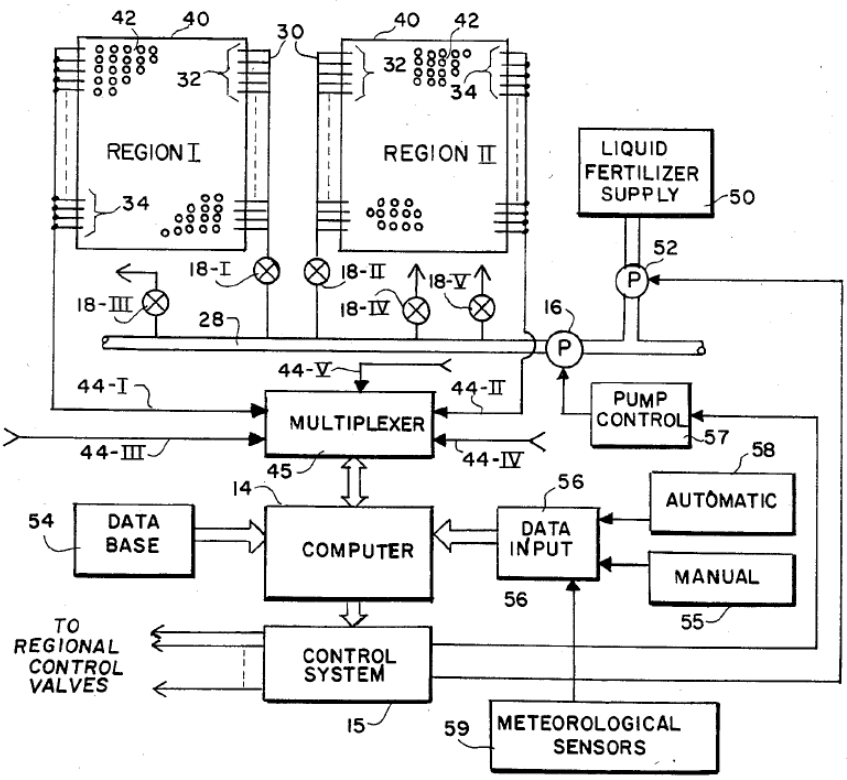

Figure 2 depicts in "detail the automatic irrigating and fertilizing system." *Id.* at 3:14. Figure 2 shows Miller's system

> being used with an orange grove having a plurality of regions 40 in which each region may be independently irrigated and fertilized. Using Region I as an example, it consists of a grove of orange trees 42. Regional supply line 30 connects to water main 28 and feeds a plurality of lateral lines 32 which run down the rows of trees 42. It is common to have a sprinkler head adjacent each tree in the region. Not shown is a multiplicity of sensors buried within the root zones of the trees 42.

Id. at 3:67–4:10.

2. Miranda (Ex. 1005)

Miranda appears to have been published on May 24, 2000. Ex. 1013, 1. Petitioner contends, "Miranda qualifies as prior art under at least pre-AIA 35 U.S.C. §102(a) because it was published and was publicly available (Ex. 1013) before the earliest priority date for the '810 patent." Pet. 15. Patent Owner does not challenge the prior art status of Miranda. *See generally* Prelim. Resp. On this record, we determine that Miranda is prior art under, at least, pre-AIA 35 U.S.C. §102(a).

Miranda is titled "A laboratory assessment of wetness sensors for leaf, fruit and trunk surfaces." Ex. 1005, 263. Miranda presents "the results of an experimental investigation of electrical resistance wetness sensors designed to detect the presence of water on leaf, fruit and trunk surfaces, in order to provide wetness distribution and persistence data on a small scale for use in predictive modelling of an individual tree canopy." *Id.* at 264.

3. Cass (Ex. 1007)

Cass was published on April 5, 2001. Ex. 1007, code (43). Petitioner contends that Cass qualifies as prior art under, at least, pre-AIA 35 U.S.C. § 102(a). Pet. 16. Patent Owner does not challenge the prior art status of

Cass. *See generally* Prelim. Resp. On this record, we determine that Cass is prior art under, at least, pre-AIA 35 U.S.C. §102(a).

Cass is titled "Biosensor Detector Array." Ex. 1007, code (54). Cass "provides an improved method for analysing complex samples using sensing elements having broad specificity for different classes of ligand," and "the detection technique used relies on a detectable label attached to the sensing elements, for example a fluorescent label, whose physical characteristics change when the sensing element is bound to a ligand." *Id.* at 2:6–13.

Cass "provides a detector array comprising a plurality of discrete biological sensing elements (typically these will be immobilised onto or within a solid support) wherein each discrete biological sensing element comprises a detectable label whose characteristics change detectably when the element binds to a ligand within the sample." *Id.* at 3:21–26. "The biological sensing elements are preferably proteins, such as proteins selected from bacterial periplasmic binding proteins, membrane proteins, odorant binding proteins from mammalian or insect olfactory organs and DNA binding proteins." *Id.* at 3:30–32.

4. McCracken (Ex. 1008)

McCracken issued on October 6, 1987, from an application filed on July 31, 1986. Ex. 1008, codes (22), (45). Petitioner contends McCracken qualifies as prior art under, at least, pre-AIA 35 U.S.C. §102(b). Pet. 17. Patent Owner does not challenge the prior art status of McCracken. *See generally* Prelim. Resp. McCracken is prior art under, at least, pre-AIA 35 U.S.C. §102(b), (e).

McCracken is titled "Microtube Applicator System." Ex. 1008, code (54). McCracken "relates to apparatus and systems for applying liquid agrichemicals to crops or to soils prior to or in conjunction with planting,

and more particularly to injection systems employing microtube applicators." *Id.* at 1:5–10.

E. Petitioner Fails to Show the Cited References Teach or Suggest All the Limitations of Any Challenged Claim

Petitioner challenges claims 1–14, 17–32, 35, and 36 of the '810 patent. Based on our analysis of Petitioner's contentions with regard to the challenged, independent claims (claims 1, 2, 6, 8, 10, 20, 24, 26, 28, and 36), we determine that Petitioner has not shown a reasonable likelihood of prevailing with respect to establishing the unpatentability of any claim of the '810 patent.[10]

Claim 1

Claim 1 is directed to a "system for automated application of insecticide to a plant" that includes "determining the type of insect detected by [an] insect sensor based on a signal from [a] DNA sensor." Ex. 1001, 9:12–28. The first limitation recited in the body of claim 1 is "an insect sensor . . . wherein the insect sensor includes a DNA sensor." *Id.* at 9:14–15.

Petitioner relies on Cass (Ex. 1007) as teaching these elements. *See* Pet. 63–64. Specifically, Petitioner relies on a sentence from Cass which states, "[t]he biological sensing elements are preferably proteins, such as proteins selected from bacterial periplasmic binding proteins, membrane proteins, odorant binding proteins from mammalian or insect olfactory

[10] Our determination that Petitioner has not sufficiently shown that the cited art teaches or suggests all the limitations of any of the challenged, independent claims necessarily dictates the same determination with regard to all the challenged, dependent claims. *See* 35 U.S.C. § 112(d) ("A claim in dependent form shall be construed to incorporate by reference all the limitations of the claim to which it refers.").

organs and DNA binding proteins." *Id*. at 63 (quoting Ex. 1007 at 3:30–32). From this sentence, Petitioner concludes, "[s]ince a biological sensing element of Cass's detector array can be an 'odorant binding proteins from . . . insect olfactory organs,' where the proteins can be 'DNA binding proteins,' Cass's detector array constitutes 'an insect sensor' that includes 'a DNA sensor.'" Pet. 63–64.

Patent Owner argues that Petitioner "mischaracterize[s] Cass's disclosures" and that "Cass . . . fails to disclose an insect sensor, detecting insects, or determining a type of insect." Prelim. Resp. 58–59. Therefore, Patent Owner contends "the Petition fails to demonstrate disclosure of these elements" and "there is no likelihood of success here." *Id.* at 59.

We agree with Patent Owner. It does not follow from using proteins from insect olfactory organs as sensing elements that Cass teaches or suggests detecting insects. *See* Prelim. Resp. 59 ("[T]he binding protein in Cass is the ***detector***, not the thing ***detected***.").

Petitioner has not shown that the cited art teaches or suggests all the limitations of claim 1 and has, therefore, failed to establish a reasonable probability of showing claim 1 is unpatentable.

<u>Claims 2, 6, 8, 10, 20, 24, 26, 28, and 36</u>

Claims 2, 6, 8, and 10 recite, "[a] system . . . comprising: a plurality of sensors, wherein each sensor is associated with, and in proximity to, one of the plants" and "a control system for controlling emission of the material to a particular plant . . . in response to a signal from the particular plant's

associated sensor." Ex. 1001, 9:29–41, 9:51–67, 10:2–18, 10:20–36.[11, 12] Claims 20, 24, 26, and 28 recite, "[a] method . . . comprising: associating one or more sensors . . . with each of the plurality of plants so that each plant has associated sensors . . . in fixed proximity to the plant; [and] using a control system to receive signals from sensors associated with a given plant." *Id.* at 11:9–20, 11:27–42, 11:45–60, 11:64–12:13.[13] Claim 36 recites, "[a] system . . . comprising[:] . . . sensing means for sensing a condition of growth of the plants, wherein one or more sensors is in fixed proximity to and associated with each of the plants; and control system means for receiving signals from a sensor associated with the particular plant." *Id.* at 12:52–63.[14]

---

[11] Claim 2 recites, "in fixed proximity to" and claims 6, 8, and 10 recite, "in proximity to." Ex. 1001, 9:29–41, 9:51–67, 10:2–18, 10:20–36.

[12] System claims 2, 6, 8, and 10 differ in that claim 2 does not further define the material or the sensor; claim 6 further defines the material as including a pesticide and the sensor as including an insect sensor; claim 8 further defines the sensor as including a protein sensor; and claim 10 further defines the material as including water and the sensor as including a leaf wetness sensor. Ex. 1001, 9:29–41, 9:51–67, 10:2–18, 10:20–36.

[13] Method claims 20, 24, 26, and 28 differ in that claim 20 does not further define the material or the sensor; claim 24 further defines the material as including a pesticide and the sensor as including an insect sensor; claim 26 further defines the material as including a pesticide and the sensor as including a protein sensor; and claim 28 further defines the material as including water and the sensor as including a leaf wetness sensor. Ex. 1001, 11:9–20, 11:27–42, 11:45–60, 11:64–12:13.

[14] Claim 1 is the only independent claim that does not recite "associated with, or in proximity to," or "respon[ding] to a signal from [a] particular plant's associated sensor," (claims 2, 6, 8, and 10) or "receiv[ing] signals from sensors associated with a given [or a particular] plant" (claims 20, 24, 26, 28, 36) limitations. *See* Ex. 1001, 9:13–27. Claim 1 recites, "an insect

Petitioner relies on Miller (Ex. 1004) as disclosing these limitations. *See* Pet. 19–26 (claim 2), 36–38 (claim 20), 44–49 (claim 36), 51–52 (claim 10), 54 (claim 28), 69–70 (claim 8[15]), 75–76 (claim 6), 77 (claim 24[16]), 79 (claim 26[17]). Specifically, Petitioner relies on Figure 1, reproduced below. *Id.* at 19.

---

sensor positioned adjacent to a plant," and "a control system coupled to the insect sensor for receiving a signal from the insect sensor." *Id.*

[15] Claim 8 also recites that the "sensor includes a protein sensor." Ex. 1001, 10:17. Petitioner relies on Cass as disclosing this element. *See* Pet. 70. The Petition states, "[s]ince a biological sensing element of Cass's detector array can preferably be a protein, Cass's detector array constitutes '**a protein sensor**.'" *Id.* It does not follow that by disclosing a sensor comprising a protein that Cass discloses detecting proteins. Petitioner has failed to establish a reasonable likelihood of establishing the cited art teaches or suggests this additional element of claim 8.

[16] Claim 24 also recites that the "sensor includes an insect sensor." Ex. 1001, 11:42. As with claim 1, Petitioner relies on Cass as teaching this limitation. *See* Pet. 78. As analyzed above in discussing claim 1, Petitioner has not shown that Cass teaches or suggests an insect sensor. Petitioner has failed to establish a reasonable likelihood of establishing the cited art teaches or suggests this additional element of claim 24.

[17] Claim 26 also recites that the "sensor includes a protein sensor." Ex. 1001, 11:60. As with claim 8, Petitioner relies on Cass as disclosing this element. *See* Pet. 79–80. For the reasons stated above with regard to claim 8, we determine that Petitioner has not shown Cass teaches or suggests this element and, thus, has failed to establish a reasonable likelihood of establishing the cited art teaches or suggests this additional element of claim 26. *See supra* n.13.

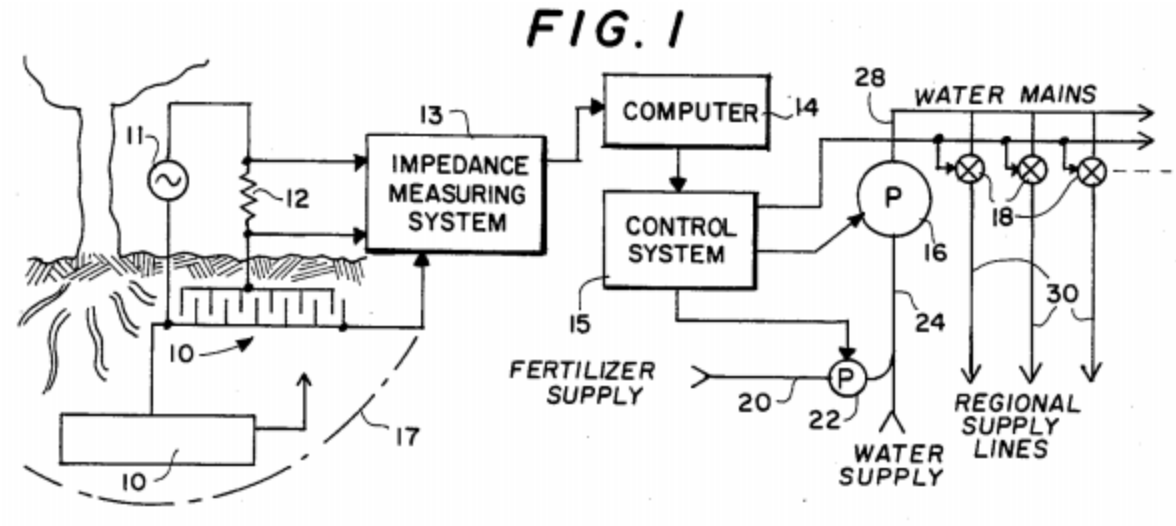

Figure 1 of Miller depicts "a partial schematic view of the water and fertilizer supply systems." Ex. 1004, 3:10–11. Petitioner quotes the following passages from the detailed description of Figure 1 of Miller: "[i]n FIG. 1, a greatly simplified diagram illustrates the operation of the **sensor 10 which is buried in the root zone 17 of a tree 19**," and "**it is preferred that at least two sensors be buried at different depths** to be able to differentiate a high moisture level from surface water from the overall soil moisture." Pet. 19 (quoting Ex. 1004, 3:24–26, 3:31–33). Petitioner also relies on an annotated Figure 2, reproduced below. *Id.* at 20.

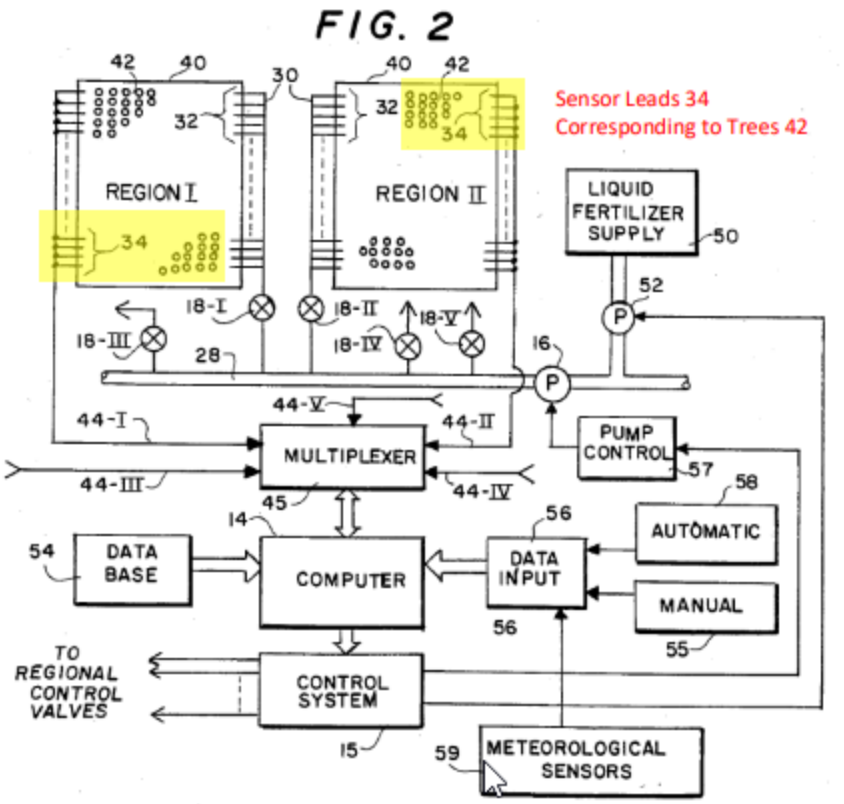

Figure 2 of Miller depicts, "a block diagram of a multiregion agricultural system such as an orange grove." Ex. 1004, 3:12–13. Petitioner quotes the following passages from the detailed description of Figure 2 of Miller: "**a multiplicity of sensors buried within the root zones of the trees 42**," "[g]enerally, several sets will be provided," and "[t]hese sensors are connected via **leads 34** to a multi-conductor cable 44-I." Pet. 20 (quoting Ex. 1004, 4:8–14). From these figures and passages, Petitioner contends that Miller teaches at least two sensors buried within the root zone of each tree and, thus, that Miller teaches "a plurality of sensors, wherein each sensor is associated with, and in fixed proximity to, one of the plants." *See* Pet. 20.[18]

[18] In addition to the evidence from Miller referred to above, Petitioner also cites paragraphs 95 and 96 of the Declaration of Gill Tsouri, Ph.D. in support of this contention. *See* Pet. 20 (citing Ex. 1003 ¶¶ 95–96). However, paragraphs 95 and 96 of the Tsouri Declaration merely consist of

With regard to the control system "respon[ding] to a signal from [a] particular plant's associated sensor," (claims 2, 6, 8, and 10) or "receiv[ing] signals from sensors associated with a given [or a particular] plant" (claims 20, 24, 26, 28, 36), Petitioner relies on the following passage from Miller: "[t]he **multiple sensor lines coming into the computer [14]** are multiplexed and the impedance of each sensor individually calculated. **From the sensors in a specific region, the requirement for water in any area can be determined and the supply valves adjusted** to produce an irrigation rate which will be related to the allowable soil moisture depletion (SMD)." Pet. 23 (quoting Ex. 1004, 2:3–8) (bracketed material in original). Petitioner contends, "since the computer determines the water requirement and moisture content of the soil based on signals from the "**sensors in a specific region**," where at least one sensor is buried within the root zone of each tree, the computer 14 controls the water pumps and valves "**in response to a signal from the particular plant's associated sensor**." *Id.* at 24.[19]

---

identical quotations of the same passages from Miller that are quoted in the Petition and the unexplained contention that Miller thus discloses "the limitations." We do not find the Tsouri Declaration to be helpful to our analysis and we give the unexplained contention in paragraph 96 ("Miller discloses the limitations") little or no weight. *See* 37 C.F.R. § 42.65.

[19] In addition to the evidence from Miller referred to above, Petitioner also cites paragraph 107 of the Declaration of Gill Tsouri, Ph.D. in support of this contention. *See* Pet. 24 (citing Ex. 1003 ¶ 107). However, paragraph 107 of the Tsouri Declaration merely consist of identical quotations of the same passages from Miller that are quoted in the Petition and the unexplained contention that Miller thus discloses the limitation. We give the unexplained contention in paragraph 107 little or no weight. *See* 37 C.F.R. § 42.65.

Patent Owner argues, "[t]he Petition fails to show that *Miller* discloses, explicitly or inherently, an association of sensors with any particular plant." Prelim. Resp. 44. More specifically, Patent Owner argues:

> The only cited disclosure of ***proximity*** to vegetation in Miller is the instruction that a sensor is "buried in the root zone 17 of a tree 19" or alternatively, "buried within the root zone of the crops" or "a multiplicity of sensors buried within the root zones of the trees 42." Petition, 19-20 (*citing* EX1004, 3:24-25, 1:46-52, 4-18). But while this may disclose fixed proximity, nothing in the disclosures describes an ***association*** or reference to any particular tree—"a tree" could be any tree, the disclosed point being location within the root zone of the soil. *Id.*

Id. at 45.

Patent Owner contends that Miller teaches placement of sensors based on characteristics of the soil and topography and not with respect to plants. Prelim. Resp. 45 ("In fact, additional disclosures excluded from these citations by the Petition make clear that the placement of sensors in *Miller* is generalized or done with respect to ***soil*** and ***topography***, ***not*** with respect to particular trees or groupings thereof."). Patent Owner relies on the following passages from Miller: "it is preferred that at least two sensors be buried at different depths to be able to differentiate a high moisture level from surface water from the overall soil moisture" and "[n]ot shown is a multiplicity of sensors buried within the root zones of the trees 42. The ***number of sensors can be determined from the topography and characteristics of the soil***. Generally, several sets will be provided." *Id.* at 45–46 (citing Ex. 1004, 3:31–34, 4:8–12).

We determine that Petitioner's contention that Miller teaches one or more sensors buried within the root zone of each tree is not supported by the disclosure of Miller. Rather, we determine Miller teaches sensors placed

within an area, region, or zone and not in association with, or in proximity to, a particular plant. The Abstract of Miller states, "[a] plurality of capacitance sensors are buried in the areas to be irrigated and fertilized." Ex. 1004, code (57). The "Summary of the Invention" states:

> The present invention is a system which utilizes a multiplicity of moisture and salinity sensors buried within the root zone of the crops . . . .
>
> In a large operation, the area would be divided into regions with sensors buried in each region so that the requirements can be determined individually for each region. . . .
>
> From the sensors in a specific region, the requirement for water in any area can be determined.

Id. at 1:46–48, 1:60-63, 2:57. The "Detailed Description of the Preferred Embodiment" states:

> In FIG. 1, a greatly simplified diagram illustrates the operation of the sensor 10 which is buried in the root zone 17 of a tree 19. . . As indicated in FIG. 1, it is preferred that at least two sensors be buried at different depths to be able to differentiate a high moisture level from surface water from the overall soil moisture. . . .
>
> Turning now to FIG. 2, a more detailed block diagram of a typical installation used in conjunction with orange groves is shown. Here, it is assumed that the system is being used with an orange grove having a plurality of regions 40 in which each region may be independently irrigated and fertilized. . . Not shown is a multiplicity of sensors buried within the root zones of the trees 42. The number of sensors can be determined by the topography and characteristics of the soil. Generally, several sets will be provided. . . the computer checks the sensors in a region II portion of the grove 40 shown as well as in the other regions not shown. . . .

> When the system is first turned on (100 [of flow diagram Figure 3]), computer 14 will request a reading from each sensor in the system. . . .
>
> As will be recognized, the system will, in 15 minutes, re-check the sensors of the areas in which irrigation and fertilizing is taking place so that the irrigation and fertilizing can be discontinued when the desired levels are reached. . . .
>
> Thus, the computer may independently control each region of the grove or farm. The reading cycles for each region may be staggered and independently controlled. It is also quite common for one region to have significantly different soil conditions than another region and therefore the computer will maintain a separate data base for each of the regions.

Id. at 3:23–26, 3:31–34, 3:66–4:4, 4:8–12, 4:39–40, 5:43–47, 6:14–20. Petitioner has not shown that the cited art teaches or suggests one or more sensors associated with, and in proximity to, each of the plants and a control system that responds to or receives signals from one or more sensors associated with a given plant.

As shown above, Petitioner relies on Figure 1 in support of its contention that Miller teaches one or more sensors buried within the root zone of each tree. However, we determine that Figure 1 of Miller does not support this contention. Figure 1 is described as a "**simplified diagram** of a sensor installation of the type used with the invention" and a "**greatly simplified diagram** illustrat[ing] the operation of the sensor 10 which is buried in the root zone 17 of a tree 19." Ex. 1001, 3:9–10, 3:24–26 (emphasis added). Thus, although Miller does not state how Figure 1 has been "simplified," it clearly indicates that Figure 1 is not be taken as a complete, detailed representation of the manner in which the sensors are installed or used. And, Figure 1 only shows two sensors installed in the root

zone of a single tree. Neither Figure 1 nor its detailed description teaches one or more sensors buried within the root zone of each tree.[20]

And, Figure 2 which is described as "a more detailed block diagram of a typical installation" teaches or suggests that sensors are not buried within the root zone of each tree. Ex. 1001, 3:66–67. As shown above, the detailed description of Figure 2 states, "Not shown is a multiplicity of sensors buried within the root zones of the trees 42. The number of sensors can be determined from the topography and characteristics of the soil. Generally, several sets will be provided." *Id.* at 4:8–12. Figure 2 depicts thirty-three trees 42 within Region I and twenty-eight trees 42 within Region II. However, the trees 42 of Figure 2 are arranged in grids in Regions I and II which suggests that each of the regions contains many more trees than those depicted. And, although Figure 2 does not depict any sensors, it does show sensor leads 34 (nine leads 34 depicted in each of Regions I and II). However, it appears that there is a lead 34 depicted for each row of trees. Nonetheless, Figure 2 does not support Petitioner's contention that one or more sensors are buried within the root zone of each tree. Taken as a whole, the disclosure of Miller does not teach or suggest one or more sensors buried in the root zone of each tree.

---

[20] In addition, we note that the Federal Circuit has cautioned against the overreliance on patent drawings and that patent drawings are not typically drawn to scale. *Kripplelz v Ford Motor Company*, 667 F.3d 1261, 1268 (Fed. Cir. 2012) ("This court has repeatedly cautioned against overreliance on drawings that are neither expressly to scale nor linked to quantitative values in the specification." (citations omitted)); *In re Olson*, 212 F.2d 590, 592 (CCPA 1954) ("It is well known that Patent Office drawings are not normally drawn to scale.").

Petitioner has not shown that the cited art teaches or suggests all the limitations of claims 2, 6, 8, 10, 20, 24, 26, 28, and 36 and has, therefore, failed to establish a reasonable probability that any of these claims are unpatentable.

F. Denial under § 325(d)

Because we deny institution on the merits, we do not reach Patent Owner's arguments as to discretionary denial under § 325(d).

G. Conclusion

We determine that Petitioner has not demonstrated a reasonable likelihood of showing any of the claims challenged in the Petition would have been obvious.

III. ORDER

In consideration of the foregoing, it is hereby:

ORDERED that, pursuant to 35 U.S.C. § 314(a), no *inter partes* review as to any claim of U.S. Patent 6,947,810 B2 is instituted.

FOR PETITIONER:

Sanjeet Dutta
Suhrid Wadekar
Goodwin Procter LLP
sdutta@goodwinlaw.com
swadekar@goodwinlaw.com

FOR PATENT OWNER:

Lauren Robinson
Brenda Entzminger
Corey Johanningmeier
Bunsow De Mory LLP
lrobinson@bdiplaw.com
bentzminger@bdiplaw.com
cjohanningmeier@bdiplaw.com