Trials@uspto.gov
571-272-7822

Paper 9
Date: May 11, 2021

UNITED STATES PATENT AND TRADEMARK OFFICE

BEFORE THE PATENT TRIAL AND APPEAL BOARD

E. & J. GALLO WINERY,
Petitioner,

v.

VINEYARD INVESTIGATIONS,
Patent Owner.

IPR2021-00076
Patent 8,528,834 B2

Before TERRENCE W. McMILLIN, JON M. JURGOVAN, and JASON W. MELVIN, *Administrative Patent Judges.*

JURGOVAN, *Administrative Patent Judge*.

DECISION
Denying Institution of *Inter Partes* Review
35 U.S.C. § 314

I. INTRODUCTION

E. & J. Gallo Winery ("Petitioner") filed a Petition to institute an *inter partes* review of claims 1–15 of U.S. Patent No. 8,528,834 B2 (Ex. 1001, the "'834 patent") pursuant to 35 U.S.C. § 311 *et seq*. Paper 1 ("Petition" or "Pet."). Vineyard Investigations ("Patent Owner") filed a Preliminary Response. Paper 8 ("Preliminary Response" or "Prelim. Resp.").

We have authority under 35 U.S.C. § 314, which provides that an *inter partes* review may not be instituted unless the information presented in the Petition, the Preliminary Response, and related evidence, shows that "there is a reasonable likelihood that the petitioner would prevail with respect to at least 1 of the claims challenged in the petition." 35 U.S.C. § 314(a) (2018). After considering the Petition, the Preliminary Response, and the evidence of record, we do not institute an *inter partes* review as to any of the challenged claims of the '834 patent on the grounds of unpatentability presented.

A. Related Proceedings

The parties identify the following related proceeding: *Vineyard Investigations v. E.& J. Gallo Winery*, Case No. 19-cv-01482 (E.D.Ca.). Pet. 1; Paper 3, 2.

In IPR2021-00077, claims of a related patent, US 6,947,810 B2, are challenged.

B. Real Parties in Interest

Petitioner identifies E. & J. Gallo Winery as the real party-in-interest. Pet. 1. Patent Owner identifies Vineyard Investigations as the real party-in-interest. Paper 3, 2.

C. The '834 Patent

The '834 patent is titled "Plant Growing System using External Data and Having Sensors Associated with Plants." Ex. 1001, code (54). The system is "for automating the growing of crops, such as grapevines." *Id.* at code (57).

The '834 patent describes that while irrigation systems, such as for the growing of grapes, "have proven effective . . . care must be taken to provide the proper amount of water over time to the crops." *Id.* at 1:39–42. The patent also describes that the application of fertilizer and insecticides, applied with machine spraying, "requires human action and judgment," and is "labor-intensive and expensive." *Id.* at 1:58–2:6.

Figure 1, reproduced below, shows the system of the '834 patent. *Id.* at 3:34.

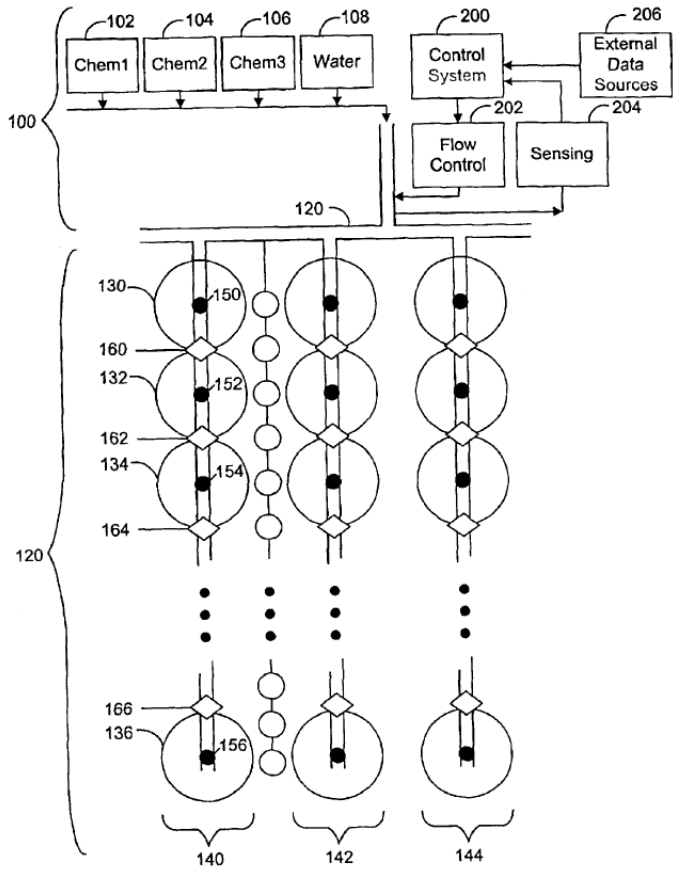

Figure 1 shows "system 100 is used to deliver materials such as chemicals 102, 104 and 106; and water 108 to crops 110 via conduit 120." *Id.* at 3:48–50. In Figure 1, "[e]ach grapevine plant is illustrated as a circle such as vines 130, 132, 134 and 136. Vines are organized into rows such as row 140, 142 and 144." *Id.* at 3:56–58. The system uses multiple inner channels to keep incompatible materials separate from each other. *Id.* at 4:1–17. Figure 1 shows outlets from conduit 120 "as black dots such as emitters 150, 152, 154 and 156." *Id.* at 4:18–19.

The '834 patent system utilizes sensors, including photodetectors, "attached to the conduit at regular intervals in accordance with the spacing of the vines." *Id.* at 4:36–38.

D. Challenged Claims

Petitioner challenges claims 1–15 of the '834 patent. Pet. 1. Of the challenged claims, independent claim 1 is directed to an apparatus and independent claim 15 is directed to a method. Claims 2–14 depend, directly or indirectly, from claim 1. Ex. 1001, 8:62–10:26. Illustrative claims 1 and 15 recite as follows:

> 1. An apparatus for dispensing materials to vegetation, the apparatus comprising:
>
> a conduit having a channel, wherein the channel is positioned in proximity to the vegetation;
>
> an outlet coupled to the channel for conveying a material from the channel to the vegetation under the control of a central controller, wherein the central controller is responsive to external data for controlling material dispensing from one or more emitters in fixed proximity to the vegetation;
>
> one or more sensors in fixed proximity to the vegetation, wherein each sensor is associated with one or more

> particular plan[ts][1] in the vegetation, wherein signals from [th]e[2] sensors are transmitted to a central control

---

[1] A court can correct an error in a claim "only if (1) the correction is not subject to reasonable debate based on consideration of the claim language and the specification and (2) the prosecution history does not suggest a different interpretation of the claims." *Novo Industries, L.P. v. Micro Molds Corp.*, 350 F.3d 1348, 1357 (Fed. Cir. 2003). The Board has the ability to correct certain errors in post-grant proceedings. *Fitbit, Inc. v. Valencell, Inc.*, 964 F.3d 1112, 1119–20 (Fed. Cir. 2020) (holding the Board erred in not correcting a "conspicuous" and undisputed error related to antecedent basis). Applying this standard to this case, we note that in the context of the claim language, "plan in the vegetation" does not make sense, whereas "plants in the vegetation" is comprehensible. The Specification contains no mention of the word "plan" but does mention the word "plants" in several locations. Ex. 1001, code (54), 1:43, 3:55, 3:62, 3:65, 4:25, 5:50, 5:54–55, 7:67, claims 2, 5, 15. Patent Owner contends that the typographical error of the word "plan" (instead of "plants") was inserted by Examiner's Amendment. Prelim. Resp. 51, n.8 (citing Ex. 1004, 203–206). The file history contains no other mention of "plan." We also note that Petitioner and Patent Owner agree that "plan" is a misspelling of the word "plants." *See, e.g.*, Pet. 31–33; Prelim. Resp. 9. Consequently, on the evidence before us, we find that correction of the word "plan" to "plants" is not subject to reasonable debate from the claim language and Specification, and the prosecution history does not suggest any different interpretation of the claims. We treat the claim language as reciting "plants" rather than "plan" in this decision.

[2] Petitioner and Patent Owner assume that the word "me" should have been "the" in the claim. *See, e.g.,* Pet. 33; Prelim. Resp. 33. We agree that "the" is the word intended from the context since "me sensors" does not make sense whereas "the sensors" is comprehensible. The phrase "me sensors" appears nowhere else in the claims, Specification, and the prosecution history whereas "the sensors" appears repeatedly. Ex. 1001, code (57), 3:22, 4:46, 4:48–49, 4:63, 7:67, claims 2, 3, 5, 15. We determine that this correction is not subject to reasonable debate from the claim language and Specification, and that the prosecution history does not suggest a different interpretation. *See* footnote 1. Accordingly, we treat the claim language as reciting "the sensors" rather than "me sensors" in this decision.

system and are used to control conveyance of the material to the vegetation.

15. A method for dispensing materials to vegetation, wherein one or more sensors for sensing a growth condition of the one or more plants are in fixed proximity to the one or more plants, wherein each sensor is associated with one or more particular plan[ts][3] in the vegetation, the method comprising:
obtaining external data for controlling material dispensing;
using a controller to receive signals from at least one of the sensors; and
using the controller to control dispensing of a material via the one or more emitters in response to the external data.

E. The Asserted Grounds

Petitioner challenges claims 1–15 of the '834 patent based on the grounds set forth in the table below.

Claim(s) Challenged	35 U.S.C. §[4]	Reference(s)/Basis
1–5, 7, 13, 15	102(b)	Miller[5]
6	103(a)	Miller, Hall[6]
10–12	103(a)	Miller, McNabb[7]
8, 9, 14	103(a)	Miller, Shitama[8]

Petitioner further relies on the testimony of Dr. Gill R. Tsouri. Ex. 1002.

---

[3] See footnote 1.

[4] Because the application leading to the '834 patent has a filing date before March 16, 2013, patentability is governed by the versions of 35 U.S.C. §§ 102 and 103 preceding the Leahy-Smith America Invents Act ("AIA"), Pub. L. No. 112–29, 125 Stat. 284 (2011).

[5] US 4,545,396, issued Oct. 8, 1985 (Ex. 1005).

[6] US 4,015,366, issued Apr. 5, 1977 (Ex. 1006).

[7] US 5,927,603, issued July 27, 1999 (Ex. 1007).

[8] JP H03-019623 A, published Jan. 28, 1991 (Ex. 1008).

II. ANALYSIS

A. Claim Construction

For an *inter partes* review petition filed after November 13, 2018, we construe claim terms "using the same claim construction standard that would be used to construe the claim in a civil action under 35 U.S.C. 282(b)." 37 C.F.R. § 42.100(b) (2020). In applying a district court-type claim construction, we are guided by the principle that the words of a claim "are generally given their ordinary and customary meaning," as would have been understood by a person of ordinary skill in the art at the time of the invention. *Phillips v. AWH Corp.*, 415 F.3d 1303, 1312–13 (Fed. Cir. 2005) (en banc) (citation omitted). "In determining the meaning of the disputed claim limitation, we look principally to the intrinsic evidence of record, examining the claim language itself, the written description, and the prosecution history, if in evidence." *DePuy Spine, Inc. v. Medtronic Sofamor Danek, Inc.*, 469 F.3d 1005, 1014 (Fed. Cir. 2006) (citing *Phillips*, 415 F.3d at 1312–17). There is a "heavy presumption," however, that a claim term carries its ordinary and customary meaning. *CCS Fitness, Inc. v. Brunswick Corp.*, 288 F.3d 1359, 1366 (Fed. Cir. 2002) (citation omitted).

In its Petition, Petitioner applies the "plain and ordinary meaning" of the claim terms. Pet. 16. Patent Owner does not dispute that the plain and ordinary meaning should apply to the claim terms, but argues that Petitioner "abuses and distorts" the plain meaning of "external data." Prelim. Resp. 35. The basis on which we ultimately decide this Petition is unrelated to the question of what is the ordinary and plain meaning of "external data." Consequently, there is no material dispute between the parties relating to claim construction that we need to decide for purposes of this institution decision.

B. Legal Standards

In order for a prior art reference to anticipate an invention, it must disclose every limitation of the claimed invention, either explicitly or inherently. *In re Schreiber*, 128 F.3d 1473, 1477 (Fed. Cir. 1997). Anticipation "requires that every element and limitation of the claim was previously described in a single prior art reference, either expressly or inherently, so as to place a person of ordinary skill in possession of the invention." *Sanofi-Synthelabo v. Apotex, Inc.*, 550 F.3d 1075, 1082 (Fed. Cir. 2008) (*citing Schering Corp. v. Geneva Pharms., Inc.*, 339 F.3d 1373, 1379 (Fed. Cir. 2003); *Cont'l Can Co. USA v. Monsanto Co.*, 948 F.2d 1264, 1267–69 (Fed. Cir. 1991)). "[U]nless a reference discloses within the four corners of the document not only all of the limitations claimed but also all of the limitations arranged or combined in the same way as recited in the claim, it cannot be said to prove prior invention of the thing claimed and, thus, cannot anticipate under 35 U.S.C. § 102." *Net MoneyIN, Inc. v. VeriSign, Inc.*, 545 F.3d 1359, 1371 (Fed. Cir. 2008).

A patent claim is unpatentable as obvious if the differences between the claimed subject matter and the prior art are such that the subject matter, as a whole, would have been obvious at the time the invention was made to a person having ordinary skill in the art to which said subject matter pertains. *KSR Int'l Co. v. Teleflex Inc.*, 550 U.S. 398, 406 (2007). The question of obviousness is resolved on the basis of underlying factual determinations including: (1) the scope and content of the prior art; (2) any differences between the claimed subject matter and the prior art; (3) the level of ordinary

skill in the art; and (4) objective evidence of non-obviousness.[9] *Graham v. John Deere Co.*, 383 U.S. 1, 17–18 (1966).

"In an [*inter partes* review], the petitioner has the burden from the onset to show with particularity why the patent it challenges is unpatentable." *Harmonic Inc. v. Avid Tech., Inc.*, 815 F.3d 1356, 1363 (Fed. Cir. 2016) (citing 35 U.S.C. § 312(a)(3) (requiring *inter partes* review petitions to identify "with particularity . . . the evidence that supports the grounds for the challenge to each claim")). Petitioners cannot satisfy their burden of proving obviousness by employing "mere conclusory statements." *In re Magnum Oil Tools Int'l, Ltd.*, 829 F.3d 1364, 1380 (Fed. Cir. 2016).

C. Level of Ordinary Skill in the Art

With regard to the level of ordinary skill in the art, Petitioner contends it would include "a person possessing at least a bachelor's degree in electrical engineering, mechanical engineering, computer engineering, water engineering management or agronomy," but that a person could also qualify "with some combination of (1) more formal education (such as a master's of science degree) and less technical experience or (2) less formal education and more technical or professional experience in the aforementioned fields." Pet. 16 (citing Ex. 1003 ¶¶ 30). Patent Owner does not address the level of ordinary skill in the art. *See generally* Prelim. Resp. In order to determine whether Petitioner has demonstrated a reasonable likelihood of showing the unpatentability of at least one of the challenged claims, we adopt Petitioner's proposed level of skill in the art.

[9] In its Preliminary Response, Patent Owner does not present any objective evidence of non-obviousness. *See generally* Prelim. Resp.

D. Cited References

1. Miller (Ex. 1005)

Miller issued on October 8, 1985, from an application filed on February 25, 1985. Ex. 1005, codes (22), (45). The earliest priority date claimed for the '834 patent is May 31, 2001. Ex. 1001, code (60). Petitioner contends Miller qualifies as prior art under, at least, pre-AIA 35 U.S.C. § 102(b). Pet. 4, 17. Patent Owner does not challenge the prior art status of Miller. *See generally* Prelim. Resp. Miller is prior art under, at least, pre-AIA 35 U.S.C. § 102(b), (e).

Miller is titled "System for Optimum Irrigating and Fertilizing." Ex. 1005, code (54). Miller "relates to a system for automatically irrigating and fertilizing of agricultural operations such as groves, truck farms, and the like and more particularly to a computer control system in which feedback from moisture and salinity sensors is provided." *Id.* at 1:7–11. Miller

> utilizes a multiplicity of moisture and salinity sensors buried within the root zone of the crops and including means for measuring the complex impedance of the sensor in which the reactive part is a measure of the moisture content of the soil, and the resistive part is a measure of the salinity of the soil.

Id. at 1:46–52. "In a large operation, the area would be divided into regions with sensors buried in each region so that the requirements can be determined individually for each region. When irrigation is needed by any region, the main pump is energized by means of control circuits operating from the computer." *Id.* at 1:60–65. For moisture sensors, "it is preferred that at least two sensors be buried at different depths to be able to differentiate a high moisture level from surface water from the overall soil moisture." *Id.* at 3:31–34.

Figure 2, reproduced below, is a block diagram of a typical installation used in conjunction with orange groves. *Id.* at 3:66–68.

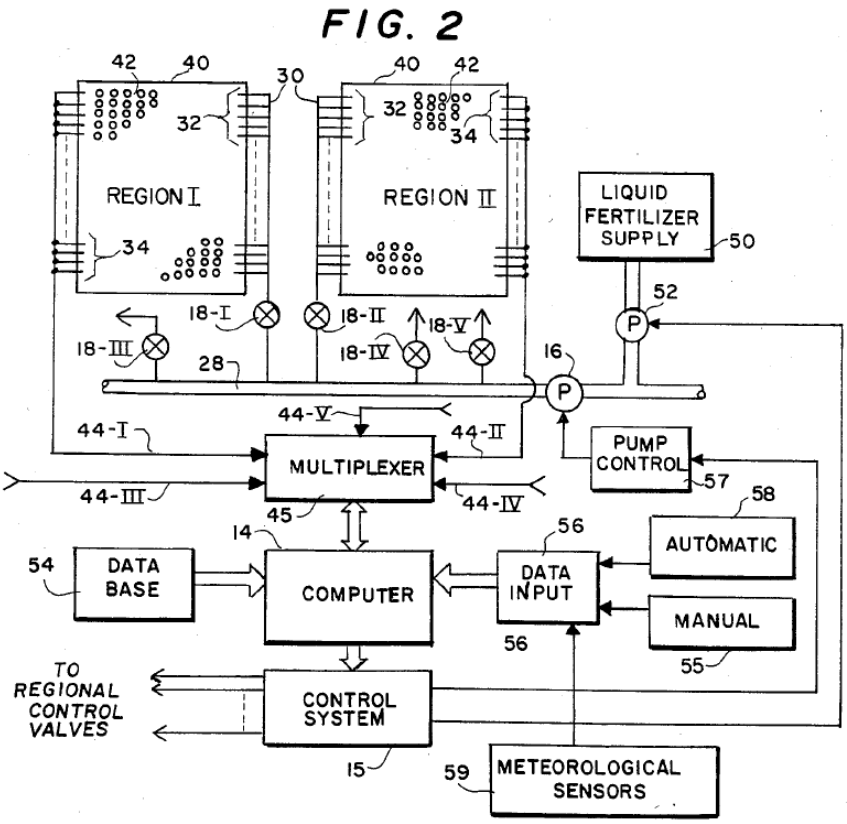

Figure 2 depicts in "detail the automatic irrigating and fertilizing system." *Id.* at 3:14. Figure 2 shows Miller's system

> being used with an orange grove having a plurality of regions 40 in which each region may be independently irrigated and fertilized. Using Region I as an example, it consists of a grove of orange trees 42. Regional supply line 30 connects to water main 28 and feeds a plurality of lateral lines 32 which run down the rows of trees 42. It is common to have a sprinkler head adjacent each tree in the region. Not shown is a multiplicity of sensors buried within the root zones of the trees 42.

Id. at 3:66–4:10.

2. Hall (Ex. 1006)

Hall issued April 5, 1977 on an application filed April 11, 1975. Ex. 1006, codes (22), (45). Petitioner contends Hall qualifies as prior art to

the ’834 patent. Pet. 17. Patent Owner does not challenge the prior art status of Hall. *See generally* Prelim. Resp. Miller is prior art under, at least, pre-AIA 35 U.S.C. § 102(b), (e).

Hall discloses “a highly automated system for the production of agricultural products” and is used to dispense fluid materials (“agricultural chemicals”) to “small bushes, for example, grapes.” *Id.* at 7:44–8:6; 11:42–46; 92:16–17.

3. McNabb (Ex. 1007)

McNabb issued July 27, 1999 on an application filed September 30, 1997. Ex. 1007, codes (22), (45). Petitioner contends McNabb is prior art to the ’834 patent. Pet. 17. Patent Owner does not challenge the prior art status of McNabb. *See generally* Prelim. Resp. Miller is prior art under, at least, pre-AIA 35 U.S.C. § 102(b), (e).

McNabb discloses “an irrigation control system and sensing/application features designed to ensure that the distribution of fluent agricultural materials such as one or more of water, fertilizers, and chemicals are delivered to an agricultural field according to detected needs.” *Id.* at 1:7-11. McNabb discloses various types of sensors, including infrared or ultraviolet sensors to indicate foliage or plant conditions; temperature sensors; wind meters; moisture sensors to detect moisture content within soil; and standard meteorological devices to detect temperature, humidity, wind, and rainfall. *Id.* at 11:1–2, 11:23–28, 11:36–38, 12:36–37, 12:60–61, 13:5–7. A computer compiles information collected by the sensors “to make decisions about controlling various operations during the cultivation of a crop.” *Id.* at 13:9–11; Fig. 3.

4. Shitama (Ex. 1008)

Shitama published January 28, 1991 on an application filed June 16, 1989. Ex. 1006, codes (22), (43). Petitioner contends Shitama is prior art to the '834 patent. Pet. 17. Patent Owner does not challenge the prior art status of Shitama. *See generally* Prelim. Resp. Shitama is prior art under, at least, pre-AIA 35 U.S.C. § 102(b).

Shitama is titled "Agricultural Product Cultivating Device." *Id.* at code (54). Shitama's device uses a fuzzy controller to supply nutrients to agricultural products based on detected growth rate and nutrient levels. *Id.* at ¶ 2(1).

E. Petitioner Fails to Show the Cited References Teach or Suggest All the Limitations of Any Challenged Claim

Petitioner challenges claims 1–15 of the '834 patent. Pet. 1. Based on our analysis of Petitioner's contentions with regard to the challenged independent claims (claims 1 and 15), we determine that Petitioner has not shown a reasonable likelihood of prevailing with respect to establishing the unpatentability of any claim of the '834 patent.[10]

<u>Claim 1</u>

Claim 1 is directed to an "apparatus for dispensing materials to vegetation" that includes a "conduit . . .," an "outlet . . .," and "one or more sensors in fixed proximity to the vegetation, *wherein each sensor is associated with one or more particular plan[ts] in the vegetation*, wherein

[10] Our determination that Petitioner has not sufficiently shown that the cited art teaches or suggests all the limitations of any of the challenged independent claims necessarily dictates the same determination with regard to all the challenged dependent claims. *See* 35 U.S.C. § 112(d) ("A claim in dependent form shall be construed to incorporate by reference all the limitations of the claim to which it refers.").

signals from [th]e sensors are transmitted to a central control system" (emphasis added). Ex. 1001, 8:62–9:10.

Petitioner relies on Miller (Ex. 1005) as disclosing these limitations. Pet. 27–35. Specifically, Petitioner relies on Miller's Figure 1, reproduced below. *Id.* at 32.

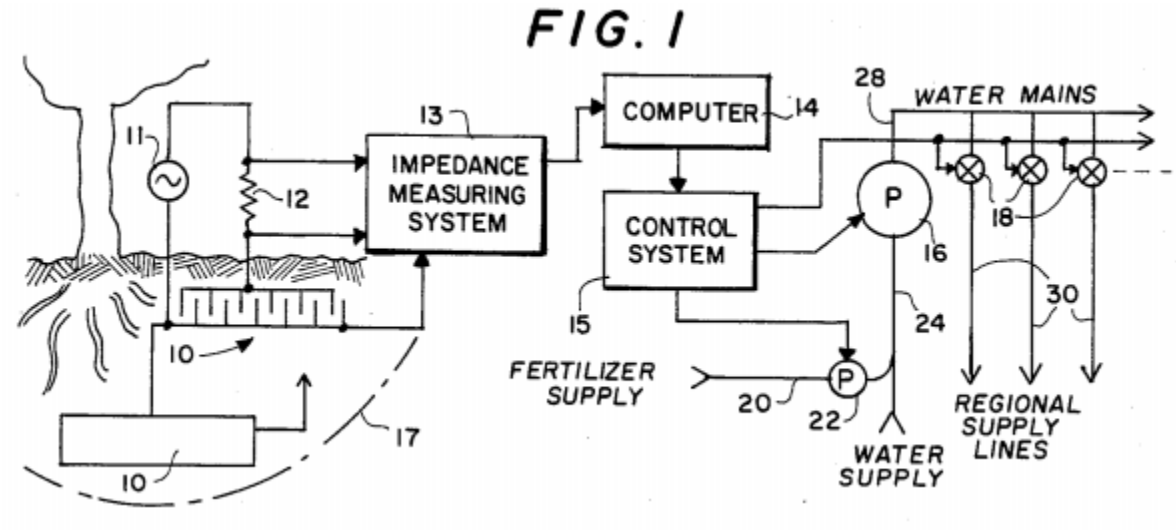

Figure 1 of Miller depicts "a partial schematic view of the water and fertilizer supply systems." Ex. 1005, 3:10–11. Petitioner quotes the following passage from the detailed description of Figure 1 of Miller: "a greatly simplified diagram illustrates the operation of the sensor 10 which is buried in the root zone 17 of a tree 19." Pet. 32 (quoting Ex. 1005, 3:24–25). Petitioner also relies on Miller's statement that the

> system . . . utilizes a multiplicity of moisture and salinity sensors buried within the root zone of the crops and including means for measuring the complex impedance of the sensor in which the reactive part is a measure of the moisture content of the soil, and the resistive part is a measure of the salinity of the soil.

Id. (quoting Ex. 1005 at 1:46–52).

The testimony of Petitioner's expert echoes the Petition regarding the limitation that "each sensor is associated with one or more particular plants." Ex. 1002 ¶¶ 95–98.

Patent Owner contends that Miller fails to disclose the limitation that "each sensor is associated with one or more particular plants." Prelim. Resp. 50–51. Patent Owner contends, as reflected in the '834 patent's title, that "enabling fine-grain control of the claimed system at the level of individual plants or groups of plants was a key object and benefit of Dr. Skinner's inventions." *Id.* at 51.

Patent Owner contends that Petitioner treats the limitations of "associated with . . . particular plants" and "[in] fixed in [*sic*] proximity to [the] vegetation" together as one requirement when they are separate requirements. *Id.* Patent Owner contends Miller discloses that a sensor is "buried in the root zone 17 of a tree 19" or "buried within the root zone of the crops," which may disclose proximity to a tree or crop, but not association to particular plants. *Id.* at 52 (citing Pet. 32; Ex, 1005, 1:46–52; 3:24–25). Patent Owner notes that Miller also discloses placement of sensors at different depths to differentiate high moisture level from surface water from overall soil moisture. *Id.* (citing Ex. 1005, 3:31–34). Patent Owner contends nothing in these Miller disclosures describes an association of a sensor to a particular tree. *Id.*

In addition, Patent Owner contends that Miller determines placement of sensors by soil and topography, not with respect to particular trees or groupings thereof. *Id.* at 53 (citing Ex. 1005 at 4:8–12). In this regard, Miller states that the "number of sensors can be determined from the topography and characteristics of the soil." Ex. 1005 at 4:8–12.

Patent Owner further notes that during prosecution of the related '810 patent, Patent Owner argued to the Examiner that Hall's sensors were "not localized to the plant level" by being associated with plants or groups of plants, and the Examiner then dropped the rejections based on Hall. Prelim. Resp. 53 (citing Ex. 2005, 72–73). Patent Owner states that "the Petition offers no evidence or explanation of how Miller might disclose an association between a sensor and particular plants." *Id.* (citing Pet. 32–33).

Patent Owner further contends that Miller and Hall teach variable control of irrigation or chemical delivery "at the most macro level." *Id.* at 54. Patent Owner contends "Miller teaches only that in a 'large operation' the total area can be roughly divided into independent 'regions.'" *Id.* (citing Ex. 1005, 1:60–63). Patent Owner contends Hall has similar disclosure but uses the term "homogenous area" instead of "region." *Id.* Patent Owner contends that neither Miller nor Hall disclose "the 'localized approach to dispensing of materials' taught in Dr. Skinner's patents and reflected in the requirement of associating sensors with one or more particular plants." *Id.*

Patent Owner contends that the '834 patent provided for fine-grain variability of control of water and other materials precisely where it is needed, by associating sensors with particular plants or groups of plants. *Id.* at 55. Patent Owner contends that Miller, like Hall, fails to provide the benefits of sensors being associated with particular plants. *Id.* at 56.

For the reasons Patent Owner mentions, we agree that Petitioner has not adequately shown that Miller discloses the claim limitation of "*wherein each sensor is associated with one or more particular plan[ts] in the vegetation*" as a separate requirement from fixing sensors in proximity to vegetation. Miller discloses placement of sensors in proximity to crops or trees on the basis of soil characteristics or depth, topography, and area or

region. Ex. 1005, 1:60–63 (sensors buried in each region so that water requirements can be determined for each region); 2:3–8 (watering by area within region), 3:24–26 (sensor buried in root zone of tree), 3:31–34 (two sensors buried at different depths to distinguish surface water and overall moisture of soil), 4:10–11 (number of sensors determined by topography and characteristics of soil), 5:4–12 (watering dry areas), Fig. 2 (watering crops or orange trees by region). Miller thus fails to disclose that each sensor is associated with one or more particular plants, which enables selective delivery of materials such as water, fertilizer, insecticides, fungicides, etc. on a plant level (or plant group level) of granularity.

Accordingly, we conclude that the Petition does not demonstrate a reasonable likelihood to prevail in showing that claim 1 is unpatentable.

Claims 2–14

Claims 2–14 depend from claim 1 and include all of its limitations. The grounds challenging these claims rely solely on Miller as disclosing the noted limitation of each sensor associated with one or more particular plants. Pet. 31–35; Ex. 1002 ¶¶ 95–98. For the reasons stated for claim 1, the Petition does not show that Miller discloses this limitation. Petitioner does not show that Hall, McNabb, or Shitama disclose this limitation either. Consequently, the Petition does not demonstrate a reasonable likelihood to prevail in showing that claims 2–14 are unpatentable as anticipated or obvious.

Claim 15

Claim 15, like claim 1, recites the limitation of "*wherein each sensor is associated with one or more particular plan[ts] in the vegetation*." Ex. 1001, 10:18–19. This limitation, however, appears in the preamble of claim 15. Petitioner does not argue that the preamble is not limiting; just

that to the extent that it is limiting, it is disclosed and anticipated by Miller. Pet. 43 (citing Ex. 1005, Ex. 1003 ¶ 127). Patent Owner's argument that Miller does not disclose this limitation assumes that claim 15's preamble is limiting. Prelim. Resp. 50–56.

A preamble limits an invention if it recites essential structure or steps, or if it is "necessary to give life, meaning, and vitality" to the claim. *Catalina Mktg. Int'l, Inc. v. Coolsavings.com, Inc.*, 289 F.3d 801, 808 (Fed. Cir. 2002) (quoting *Pitney Bowes, Inc. v. Hewlett-Packard Co.*, 182 F.3d 1298, 1305 (Fed. Cir. 1999)). The '834 patent teaches that "each individual emitter and sensor, can have intelligent control" and that a "microprocessor can use input from one or more sensors to control an emitter local to the sensor." *Id.* at 5:45–48. The '834 patent recognizes that different parts of a vineyard may need different degrees of irrigation, and that some plants may be exposed to insects or disease and not others. *Id.* at 5:50–51. The '834 patent states that "[w]ith more finely-grained monitoring and control . . . delivery of chemicals, water, and other materials can be made to only the exposed plants." *Id.* at 5:51–54. The '834 patent states that this feature achieves the benefits of reducing use of agricultural chemicals, applying the chemicals to plants at the right time, and improving yield and quality of the fruit grown. *Id.* at 6:19–26. Hence, the preamble limitation reciting that each sensor is associated with one or more particular plants is not merely the purpose or intended use of the claimed invention, but relates to essential structure and steps needed to give life, meaning, and vitality to the claim. In other words, the body of the claim, taken alone, would not be sufficient to set out the complete invention. *See Pitney Bowes*, 182 F.3d at 1305.

Further evidence that the preamble is limiting is that the Examiner added the limitation that each sensor is associated with one or more

particular plants to the preamble of claim 15 by Examiner's Amendment, which led to the allowance of the '834 patent. *See* Ex. 1004, 203–206. The record thus shows reliance on the added limitation to distinguish claim 15 over the prior art. "[C]lear reliance on the preamble during prosecution to distinguish the claimed invention from the prior art transforms the preamble into a claim limitation because such reliance indicates use of the preamble to define, in part, the claimed invention." *Catalina*, 289 F.3d at 808–09 (citing *Bristol-Myers Squibb Co. v. Ben Venue Labs., Inc.*, 246 F.3d 1368, 1375 (Fed. Cir. 2001)).

We also note that the preamble provides antecedent basis for terms used in the body of the claim, including "dispensing materials" and "sensors." "[W]hen the limitations in the body of [a] claim 'rely upon and derive antecedent basis from the preamble, then the preamble may act as a necessary component of the claimed invention.'" *Bicon, Inc. v. Straumann Co.*, 441 F.3d 945, 952 (Fed. Cir. 2006) (quoting *Eaton Corp. v. Rockwell Int'l Corp.*, 323 F.3d 1332, 1339 (Fed. Cir. 2003)).

Accordingly, the record shows sufficiently that the preamble of claim 15 is limiting. The preamble recites the limitation "*wherein each sensor is associated with one or more particular plan[ts] in the vegetation.*" For the reasons given for the same limitation in claim 1, Petitioner has not shown that Miller discloses this limitation of claim 15. Consequently, Petitioner has not shown a reasonable likelihood to prevail in showing that claim 15 is anticipated by Miller.

F. Other Arguments

Because we deny institution on the merits, we do not reach Patent Owner's remaining arguments regarding the qualifications of Petitioner's

expert, the meaning of "external data," or discretionary denial under § 325(d).

G. Conclusion

We determine that Petitioner has not demonstrated a reasonable likelihood of showing any of the claims challenged in the Petition would have been anticipated or obvious.

III. ORDER

In consideration of the foregoing, it is hereby:

ORDERED that, pursuant to 35 U.S.C. § 314(a), no *inter partes* review as to any claim of U.S. Patent 8,528,834 B2 is instituted.

FOR PETITIONER:

Sanjeet Dutta
Suhrid Wadekar
GOODWIN PROCTER LLP
sdutta@goodwinlaw.com
swadekar@goodwinlaw.com

FOR PATENT OWNER:

Lauren Robinson
Brenda Entzminger
Corey Johanningmeier
BUNSOW DE MORY LLP
lrobinson@bdiplaw.com
bentzminger@bdiplaw.com
cjohanningmeier@bdiplaw.com